5020-0105 CO_2ntrol Life - Operating Instructions

Product Overview

Thank you for selecting 5020-0105 desktop $C0_2$ monitor, 5020-0105 C02 monitor is smart, compact and easy-to-use. In addition to measuring the $C0_2$ concentration, 5020-0105 can also measure the ambient temperature and the relative humidity (CO_2+Temp.+RH). This product is developed to detect the presence of $C0_2$ in ambient air and help people to take care of Indoor Air Quality. 5020-0105 can be widely used in the office building, school, exhibition hall, shopping mall, meeting room, fitness center, restaurant and other public places where personal comfort, healthy is important.

Features:

· Three different LED display shows the current Indoor Air Quality
· Press MUTE button for alarm on/off.
· Built in the LCD Backlight for easy reading in the dark.

Warnings:

· Please take off the AC power adapter and store it weil when this $C0_2$ monitor left idle for long.
· This $C0_2$ monitor is for harne use, not suitable for certifying the lest results.
· If use this $C0_2$ monitor for testing, 5020-0105 does not guarantee the lest results.

1. Green LED Display (<800ppm)
2. Yellow LED Display (800-1200ppm)
3. Red LED Display (>1200ppm & buzzer alarm)
4. Mute Button
5. Power Inlet
6. Housing Stand
7. Screw Position

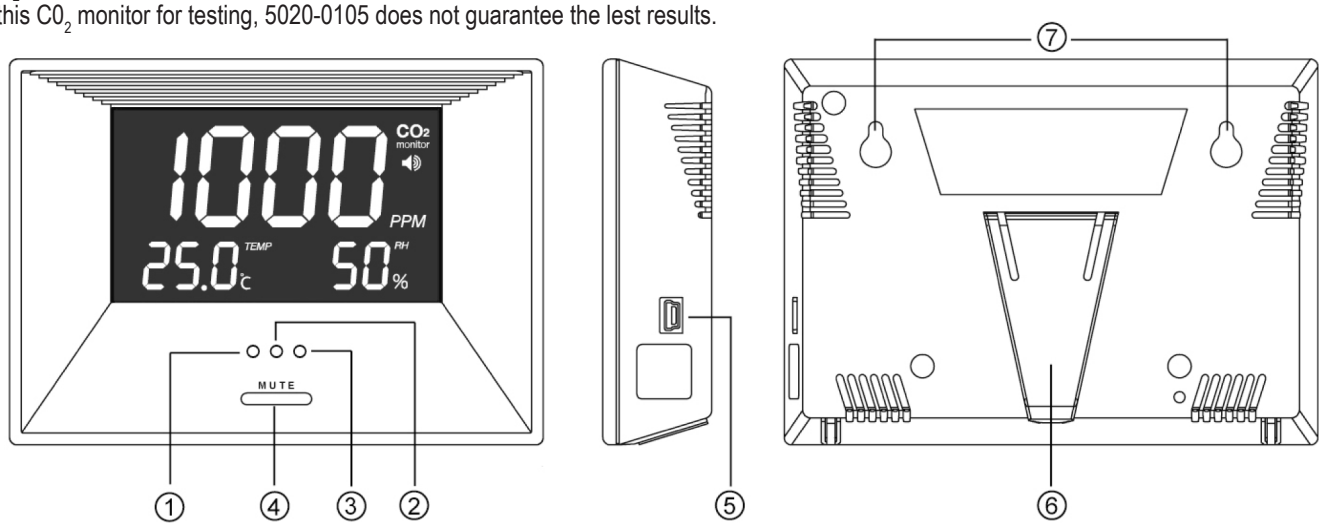

⚠ EMC/RFI

Readings may be affected if the uni! is operated within radio frequency electromagnetic field strength of approximately 3 volts per meter, but the performance of the instrument will not be permanently affected. Note: Under the electromagnetic field of 3V/m, the reading will not meet the specification.

Warm-Up Time: 2 MIN.

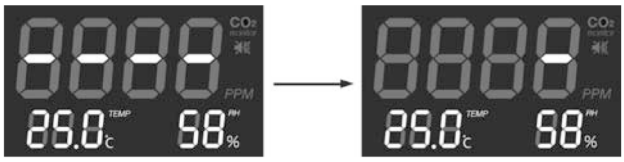

1. 2 min. warm-up time when first time power.
2. The LCD shows 4 bars with 1sec blank cycle during warm-up
3. The MUTE button is disabled during warm-up
4. The device shows the C02 readin after warm-u

Usin the MUTE function:

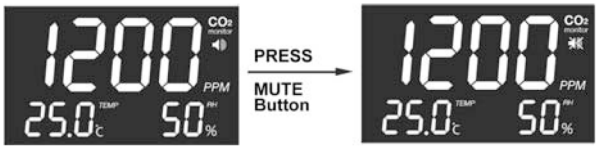

Press MUTE button to select buzzer on/off. If the „MUTE“function is off, while $C0_2$ concentration exceed the alarm level (>1200 ppm), there will be a buzzer.
Note: The device settin with alarm is buzzer on when power on first time, user can set the alarm on/off under MUTE function

Safety Instructions:

Warning: Your safety is very important to us .To ensure to use the product correctly and safely, we would like to draw your attention to read the warning and entire User Manual before using the product. These are important safety information and should be observed at all times.

1. Check if the contents of the package are undamaged and complete.
2. For cleaning the instrument please do not use an abrasive cleaner only a dry or moist piece of soft cloth. Do not allow any liquid into the interior of the device.
3. Please store the measuring instrument in a dry and clean place.
4. Avoid any force like shocks or pressure to the instrument.
5. No responsibility is taken for irregular or incomplete measuring values and their results, the liability for subsequent damages is excluded!
6. Do not keep the product under the hol and moisture environment. Keep the product away from the heat source or near water.
7. Please use only the included power adaptor. Improper power adaptor or power sources can cause serious damage to the product, or result in injury or death to the user.

Specificationen:

Method - NDIR · Display - LCD · Independent CO_2, RH and Temperature readings · Sample Method - Diffusion or flow through (50~200 ml/min)

CO_2 Specification

Measurement Range:	0-3000ppm display
Display Resolution:	1ppm (0~1000ppm); 5ppm (1001~2000ppm); 10ppm (2001~3000ppm)
Repeatability	± 20ppm @ 400ppm
Response Time:	About 2 min for 63% step change
Warm-up Time:	2 min. at 22°C
Zone LED Display:	Green: <800ppm; yellow: 800~1200ppm; Red >1200ppm

Temperature Specification:

Temperature Range:	0°C to 50°C display
Display Resolution:	0.1°C
Display Unit:	°C
Response Time:	20-30 minutes (case must equalize with environment)

RH Specification:

Measurement Range:	20-90% RH
Display Resolution:	1% RH
Response Time:	< 5Minuten for 63% step change

Operating Conditions:

Operating Temperature:	0°C - 50°C
Humidity Range::	0 ~ 95% RH non-condensing
Storage Temperature:	-20°C - 60°C

Power consumption:

Power supply:	USB or 5 VDC from external AC/DC-adapter which is included in package (Use specified AC adapter only) Input: AC 100~240V , 50/60HZ , 0.2A Output: DC 5.0V , 1.0 A , 5.0W Average active efficiency: 74.926% Noload power consumption: 0.0343W

Dimension:

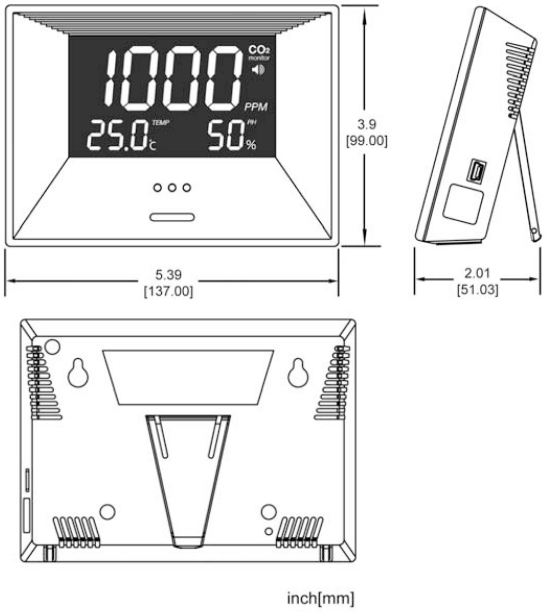

Explanation of symbols

This sign certifies that the product meets the requirements of the EEC directive and has been tested according to the specified test methods.

Waste disposal

This instrument is labelled in accordance with the EU Waste Electrical and Electronic Equipment Directive (WEEE). Please do not dispose of this instrument in household waste. The user is obligated to take end-of-life devices to a designated collection point for the disposal of electrical and electronic equipment, in order to ensure environmentally-compatible disposal.

Fault Codes & Troubleshooting Guede:

Fault Icon:	Description of the fault:	Suggested Actions:
Err3	The ambient temperature has exceeded the operating temperature range (0...50°C)	This error will clear when the temperature returns to the range between 0...50°C.
Err5 Err6	EEPROM System Problem	Please reconnect AC adapter to 5020-0105 CO2 Monitor. If the „Err5, Err6“ still appears, please contact the Service Department for further assistance.

Caring for poduct

To ensure you receive the maximum benefit from using this product, please observe the follow guidelines.

1 Cleaning: Disconnect the power before clean- Use a damp cloth, do not use the liquid cleaning agent, such as benzene, thinner or aerosols.

2. Repair: Do not attempt to repair the product or modify the circuitry by yourself. Please contact with the local dealer or a qualified repairman if the product needs servicing.

3. Air circulation: The vents allow the air circulation liquid for measurement of the CO_2 concentration and the ventilation should not be blocked.

DOSTMANN electronic GmbH ● Mess- und Steuertechnik ● Waldenbergweg 3b ● D-97877 Wertheim-Reicholzheim Germany
Phone:+49 (0) 93 42 / 3 08 90 ● E-Mail: info@dostmann-electronic.de ● www.dostmann-electronic.de